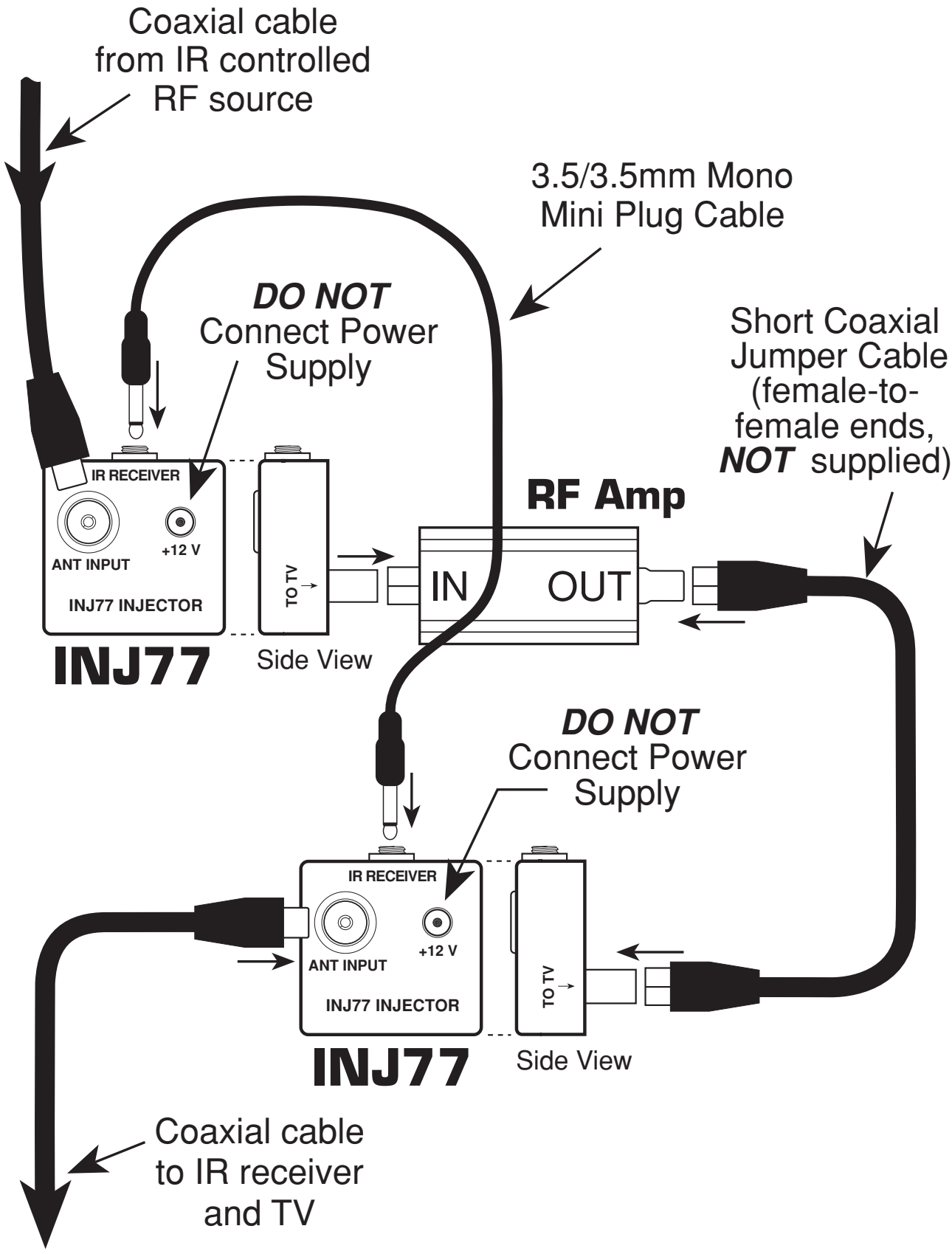
Coaxial cable
from IR controlled
RF source
3.5/3.5mm Mono
Mini Plug Cable
DO NOT
Connect Power
Supply
Short Coaxial
Jumper Cable
(female-to-
female ends,
NOT supplied)
IR RECEIVER
ANT INPUT
+12 V
INJ77 INJECTOR
TO TV
INJ77
Side View
RF Amp
IN
OUT
DO NOT
Connect Power
Supply
IR RECEIVER
ANT INPUT
+12 V
INJ77 INJECTOR
TO TV
INJ77
Side View
Coaxial cable
to IR receiver
and TV