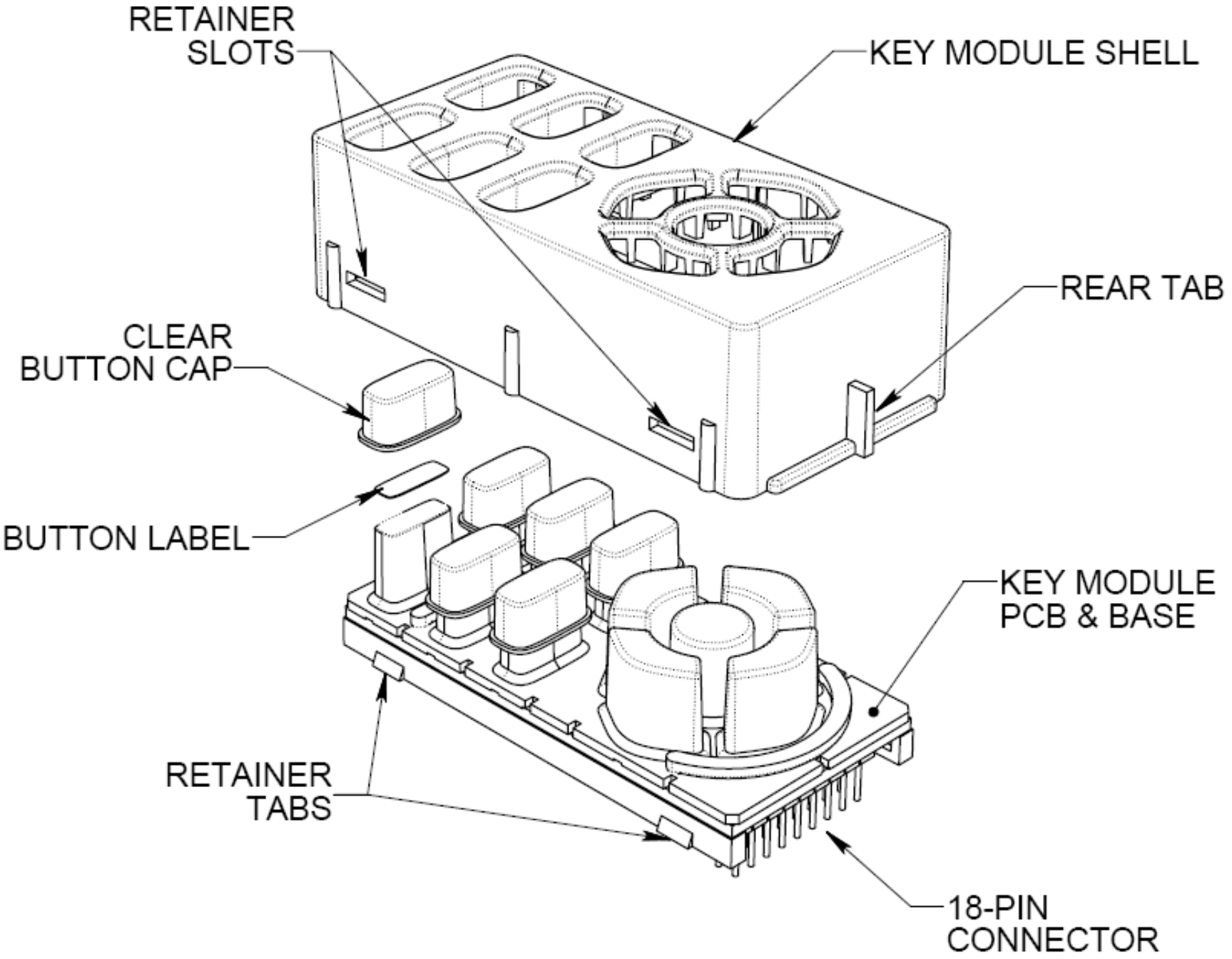
RETAINER SLOTS
KEY MODULE SHELL
REAR TAB
CLEAR BUTTON CAP
BUTTON LABEL
KEY MODULE PCB & BASE
RETAINER TABS
18-PIN CONNECTOR