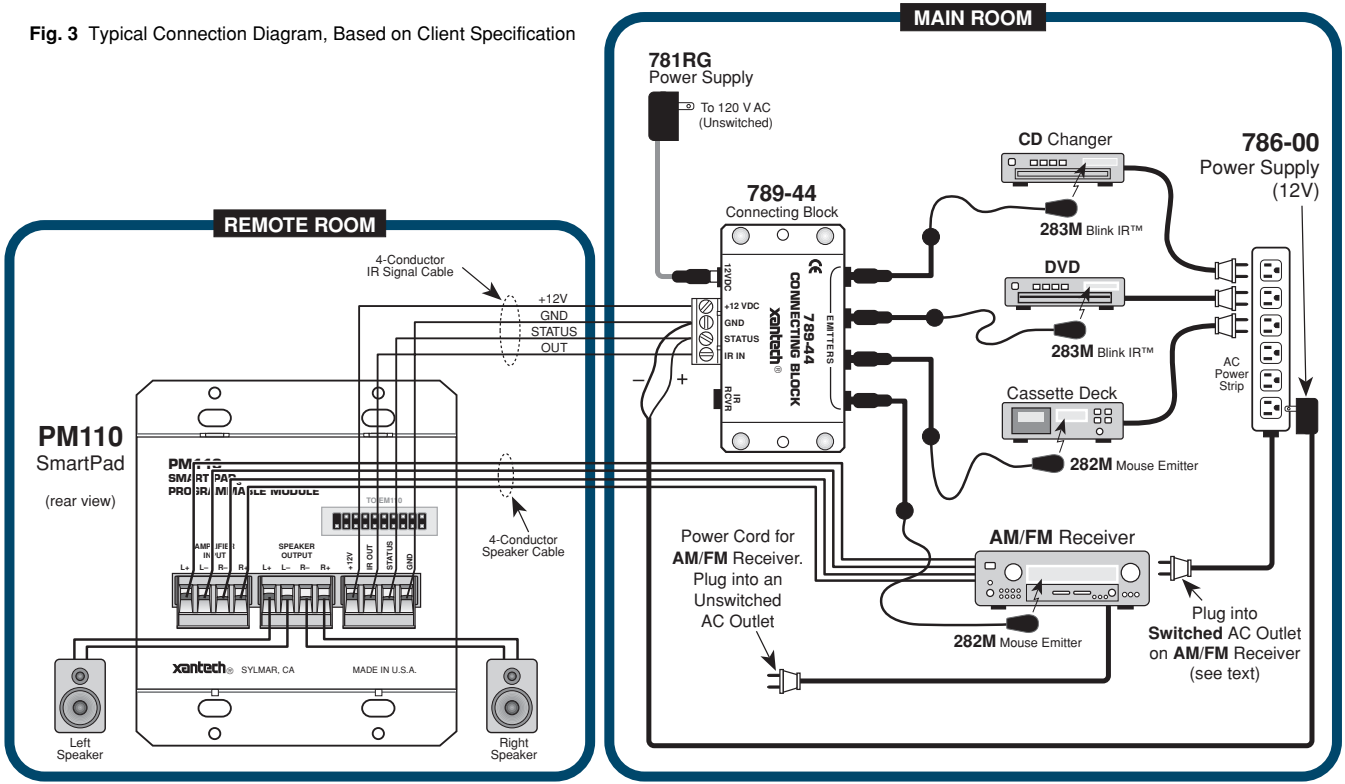Fig. 3 Typical Connection Diagram, Based on Client Specification