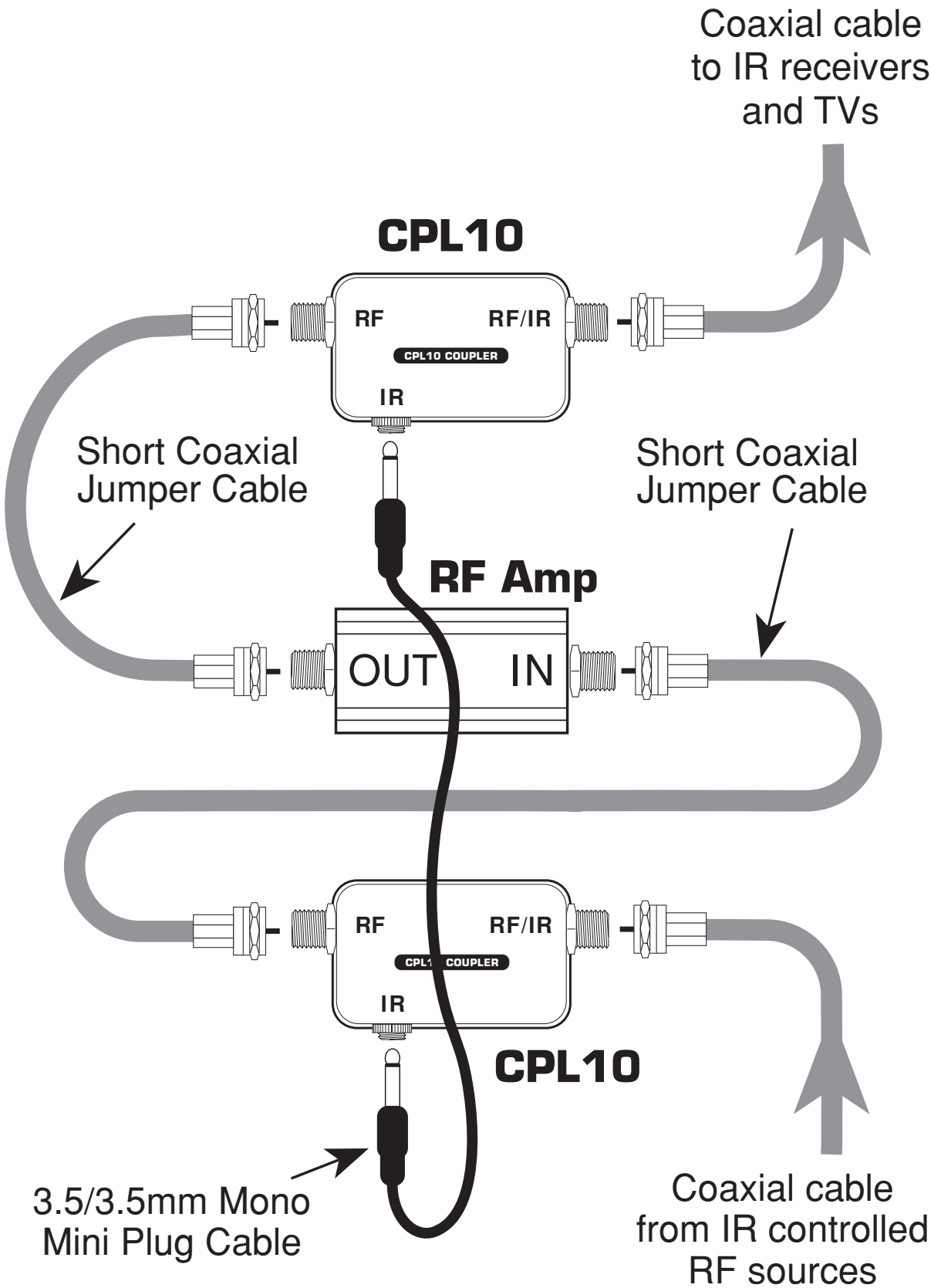
Coaxial cable
to IR receivers
and TVs
CPL10
RF
RF/IR
CPL10 COUPLER
IR
Short Coaxial
Jumper Cable
Short Coaxial
Jumper Cable
RF Amp
OUT
IN
RF
RF/IR
IR
CPL10
3.5/3.5mm Mono
Mini Plug Cable
Coaxial cable
from IR controlled
RF sources